DIMENSIONS OF ELECTRICAL APPARATUS USED WITH 600-VOLT, TYPE PC RAILWAY CONTROL EQUIPMENT

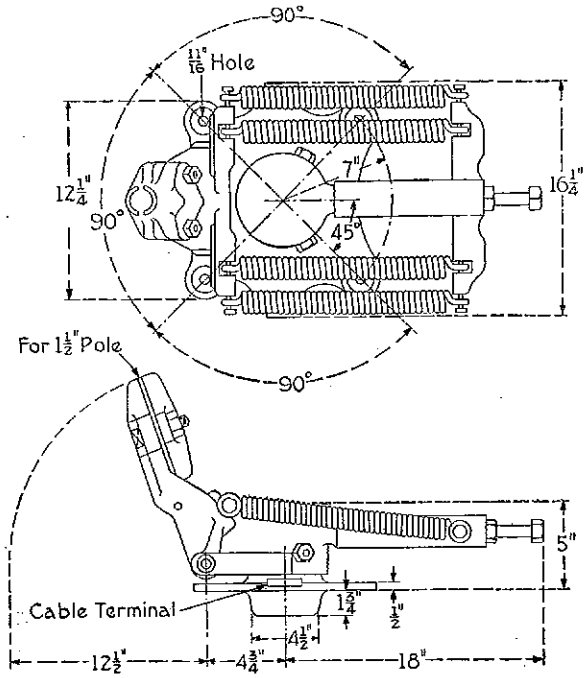

US-13-E Trolley Base
Approx. Weight 115 lb.

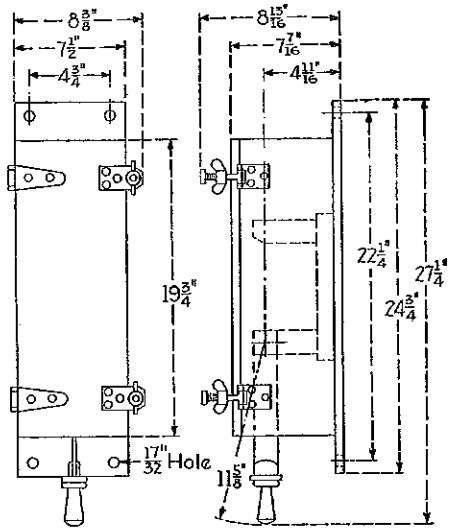

MS-118-A Main Switch
Approx Weight 24 lb.

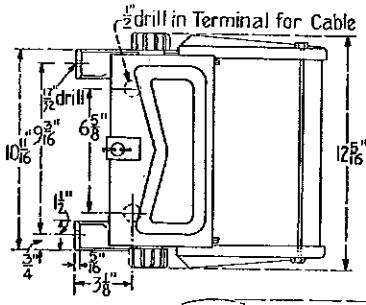

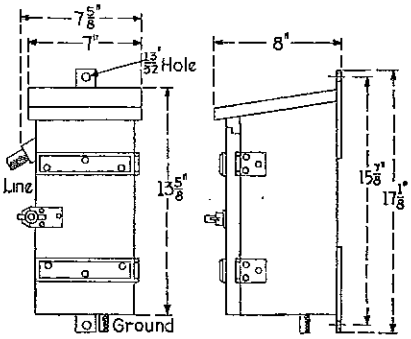

MD-3 Lightning Arrester
Approx. Weight 15 lb.

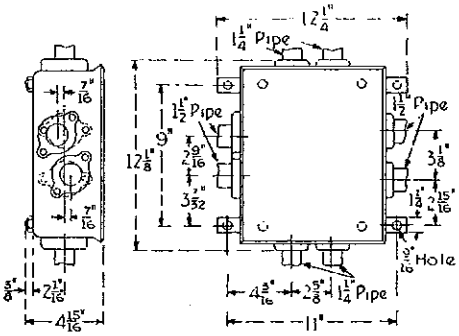

BJ-386-B Distributing Box
Approx Weight 18 lb

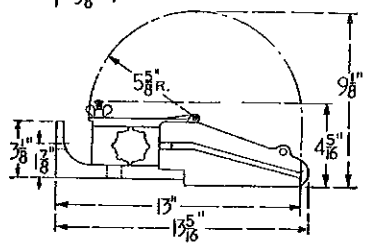

MA-13-F Fuse Box
Approx. Weight 17 lb.

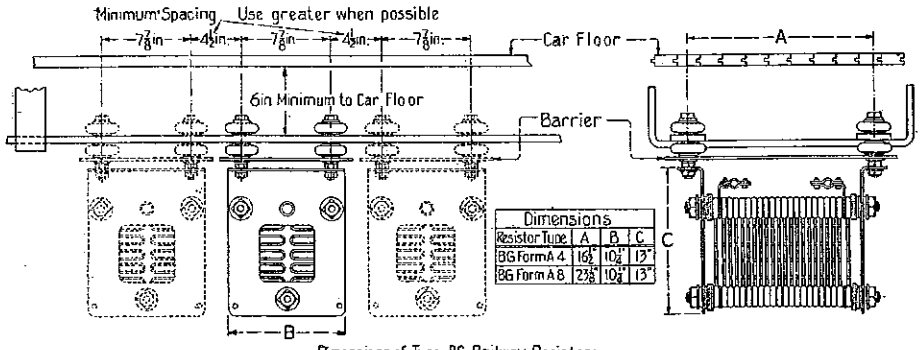

Dimensions			
Resistor Type	A	B	C
BG Form A 4	16 1/2"	10 1/4"	13"
BG Form A 8	23 3/8"	10 1/4"	13"

Dimensions of Type BG Railway Resistors

Form	Approx. Weight
A-4	80 lb.
A-8	110 lb

For REFERENCE ONLY unless endorsed on back.

DISTRICT OFFICES MAY APPROVE THIS PRINT FOR CONSTRUCTION.

2 JAN., 1924

No. 15380

ENGINEERING DEPT.
GENERAL ELECTRIC COMPANY, U.S.A.

2m 2-17-25